Airxchange Energy Recovery Wheels
Series ERC-19 through ERC-125

Operation & Maintenance

January 2026

www.airxchange.com/replacement-parts/ | 85 Longwater Drive | Rockland, MA 02370 | Tel. 781-871-4816 | Fax 781-871-3029

Table of Contents

Safety 2

Product Overview 3

About Airxchange Energy Recovery Wheels 3

Service Tools 6

Operating Instructions 7

Pre-Startup 7

Post-Startup 10

Routine and Preventative Maintenance 11

Inspection Checklist 11

Cleaning Airxchange Segments 12

Segment Removal/Installation 14

19 to 25-inch Monolithic Wheel 15

25 to 30 Inch Segmented Wheel 16

36 to 86-inch Segmented Wheel 18

92 to 125-inch Segmented Wheel 20

Record Product Information for Reference 22

Safety

Electrical Safety

WARNING

Before servicing entire HVAC system, turn off the main disconnect to the unit. Use the site-specific Lockout-Tagout procedure.

Safety around Metal and Moving Parts

WARNING

Do not touch moving parts.

Use site specific Lockout-tagout procedure to turn off all moving parts in the HVAC system before servicing.

Tuck in all loose clothing when near moving parts.

Wear gloves when handling HVAC components.

Product Overview

About Airxchange Energy Recovery Wheels

Unless noted, the information in this manual applies to all available models of Airxchange energy recovery wheels.

Energy recovery wheels rotate between the incoming outdoor air stream and the building exhaust air stream. As the wheel rotates, it transfers a percentage of the heat and moisture differential from one air stream to the other. Instead of wasting energy in the exhaust airstream, it is temporarily captured by the energy transfer media and then released to pre-heat, pre-cool, humidify, or dehumidify the incoming air, Figure 1.

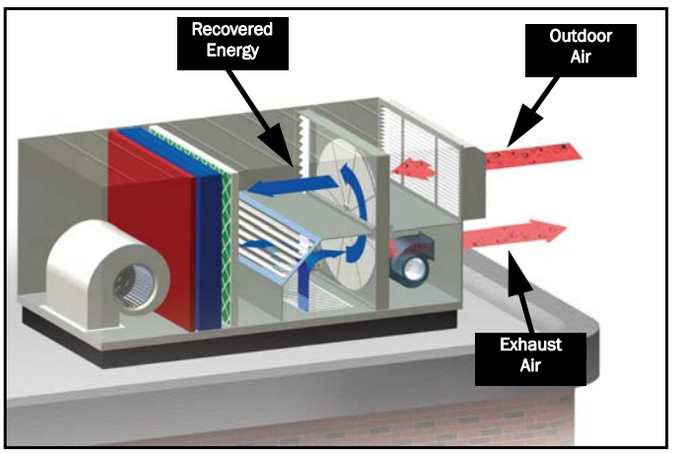

Figure 1 An ERV system pre-conditions outdoor air with recovered energy.

Airxchange wheels are designed with segmented energy transfer media. The segments are mounted in a stainless steel wheel, which then rotates within a galvanized metal cassette frame. The segmentation allows the transfer media to be easily removed for cleaning or replacement.

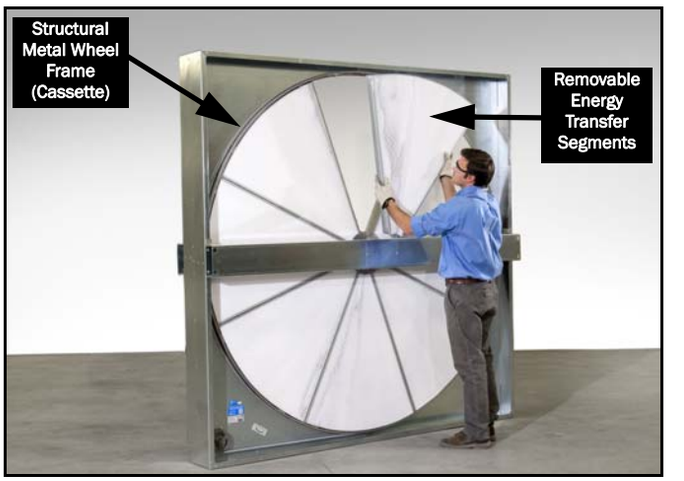

Figure 2 Airxchange structural metal wheel and frame assembly with removable polymer segments.

Moisture Transfer

Depending on the application, the energy recovery media may include a desiccant. Desiccants transfer water molecules between two air streams of different vapor pressures. The vapor pressure differential drives water molecules into/from desiccants to transfer moisture from the more humid air stream to the drier air stream as the wheel rotates.

UL Approved and AHRI Certified

- Airxchange energy recovery cassettes are UL Recognized Components under UL Standard 1812, Ducted Heat Recovery Ventilators.
- Airxchange recovery performance ratings are certified by the AHRI Air-to-Air Energy Recovery Ventilation Equipment Certification Program.

Figure 3 Airxchange wheels are UL and AHRI Certified.

Overview of Wheel Components

Refer to Figure 4 and the list below for the high level components in an Airxchange wheel.

For an Illustrated Parts Breakdown of a particular wheel, enter the serial number into the Parts Lookup tool at **Airxchange.com/Service**.

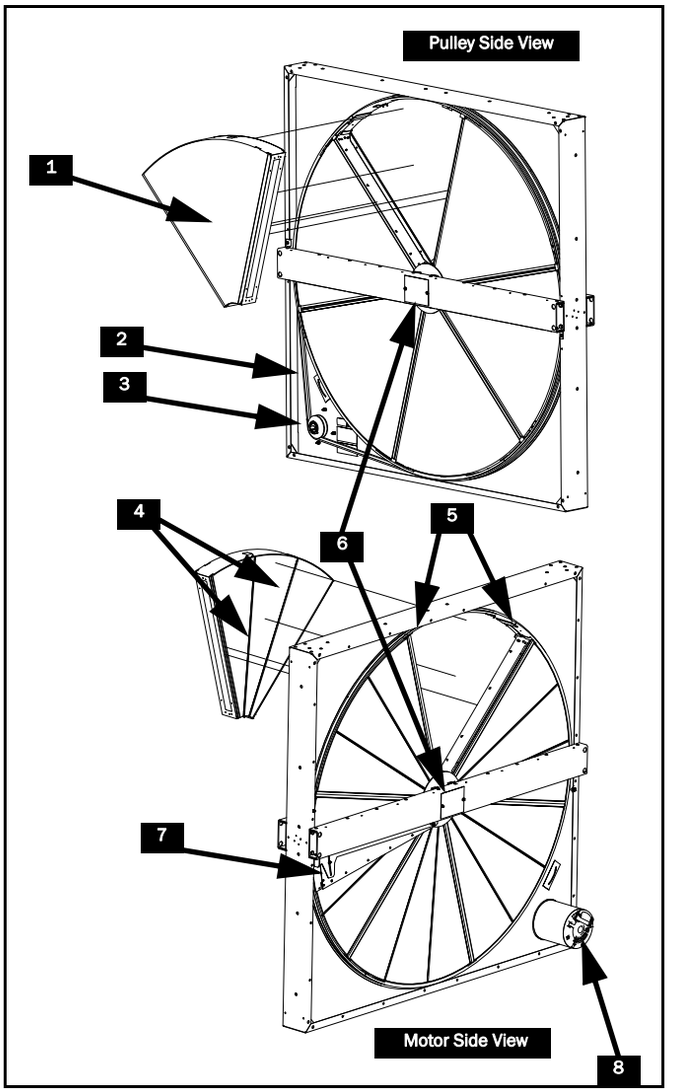

Figure 4 Exploded view of Typical Airxchange wheel.

- (1) Removable Segment (Also referred to as “Media”)
- (2) Permanent Tension Belt
- (3) Pulley
- (4) Embedded Segment Stiffeners
- (5) Segment Retaining Latches
- (6) Bearing Beam and Bearing Access Cover Plate (Diameter Seals are behind Bearing Beam on both sides)
- (7) Adjustable Purge
- (8) Motor

Identify Cassettes With Serial Number

All Airxchange wheels are labeled with Model, Serial, and Part numbers. The label can be found on the sheet metal adjacent to the drive pulley, Figure 5. You should always have a serial number when contacting Airxchange for product support or when ordering replacement parts.

See *Record Product Information for Reference beginning on page 20* for a location to log the details about numerous wheels in a system.

For more details on the Airxchange Parts Lookup tool, see *Service Tools beginning on page 5*.

Figure 5 Product label (with serial number) on pulley corner of each wheel.

AIRXCHANGE

Section 1 Cont.: Intro. to Airxchange Cassette

Interpreting the Airxchange Model Number

Example Model Description

"ERC-5262C-S-P1-DW-04-X03"

Energy Recovery Cassette: All models begin with "ERC-"

Diameter of wheel (in.)

Airflow x 100 (CFM)

Matrix Type
- Standard " "
- Channeled "C"

ERC - 52 62 C - S - P1 - DW - 04 - X03

Media Type
"_" - Desiccant
"S" - Sensible

"A1" - 3A Molecular Sieve Desiccant

"4M" - Aluminum

"BW" - Blue Wave

Adjustable Purge: Only applies to Channeled Matrix "C"

"P1": Motor Side *-(default location)*

"P2": Motor Side -

"P3": Pulley Side -

"P4": Pulley Side

Seal Options, exclusive of using purge:

"R" - Rotate Beam. Seals adjustable from opposite side of motor and pulley.

Other options:

DW" - Double Wall
"PC" - Powder Coated
"H" - Polycarbonate (Hi-temp applications)

X-Codes:

Identifies other OEM specific options.

Motor Configuration:

Code	Std/Inv	Voltage	Ph	Freq. (Hz)
01	Std.	115	1	50/60
02	Std.	208-230	1	50/60
03	Std.	200/208-230	1	50/60
04	Std.	200-230/460	3	60
05	Std.	200/400	3	50
06	Std.	575	3	60
07	Std.	460	1	60
08	Std.	380	3	50/60

A## - Indicates Alternate Motor Location (e.g. A04)
##L - Indicates Motor Wired for Lower Voltage (e.g. 04L)*
##H - Indicates Motor Wired for Higher Voltage (e.g. 04H)*
** only available on "4M" Models (size ERC-30 - ERC-52)*

Service Tools

If you have any questions, a representative from Airxchange will offer guidance and support for maintaining, servicing, and ordering parts for your energy recovery wheel. Call **(781) 871-4816** or email **contact_us@airxchange.com** for product support.

Service Website

Airxchange.com/Service provides maintenance and parts information to technicians working in the field:

- *Parts Lookup* - Access replacement parts information, drawings & more for your Airxchange wheel(s) using the six digit serial number on the product label, Figure 5.
- *Instructional Videos* - View our library of short instructional videos on how to maintain Airxchange cassettes.
- *Supporting Documents* - View our library of support and maintenance documents.
- Contact information for the Airxchange Service Department.

Identify Replacement Parts

To identify the exact replacement part for any wheel, contact Airxchange with the wheel serial number or enter the serial number into the Airxchange Parts Lookup tool on the Product Support Website.

Airxchange offers replacement parts for the following components:

- Belt
- Media Segments
- Bearing
- Diameter Seals
- Purge
- Motor
- Pulley
- Segment Latches
- Shafts
- Retaining Straps
- Seal Material

QR Label on Each Wheel

For each wheel manufactured after 2014, a quick response (QR) label is provided below the product label. and can be scanned with any Smart-phone.

The label and location are shown in Figure 6.

Figure 6 Airxchange QR Label directing to Product Support - Service Website.

Pre-Startup

WARNING

Before servicing entire HVAC system, turn off the main disconnect to the unit. Use the site-specific Lockout-Tagout procedure.

Motor Guidelines

Note the following for proper motor function:

- Always follow motor manufacturer's wiring instructions.
- All wheels should rotate clockwise when viewed from the pulley side.
- On 3-phase motors, if the wheel does not rotate clockwise (when viewed from pulley side), shut off power to the system and interchange any two power supply leads to reverse rotation.
- Inverter duty motors should not exceed a 20:1 turn down ratio.

Inspect Diameter Seals

Diameter seals, Figure 7, are set at the factory, but should be inspected before operation.

To check the seal, slide a piece of paper ("feeler gauge") between the seal and the media at multiple locations on both sides of the bearing as you rotate the wheel slowly by hand (clockwise when viewed from the pulley side). Verify that the media slightly grabs the paper during the rotation.

If necessary, loosen adjusting screws along the bearing beam and re-set seal to a slight interference fit with the wheel media, Figure 7.

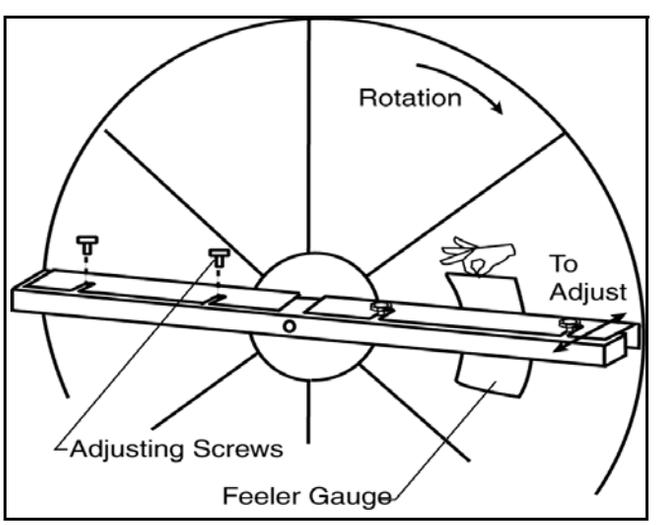

Figure 7 Setting diameter seals.

Set Purge Angle (if necessary)

The purge sector is an option available on channeled matrix Airxchange wheels, Figure 8 and 9. A "P" in the model number designates that the wheel includes a purge sector.

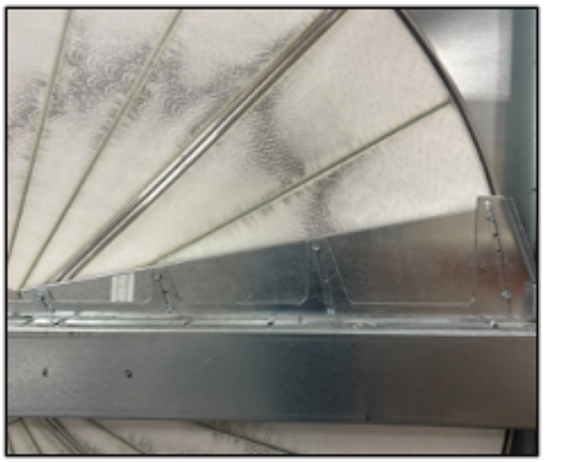

Figure 8 Purge installed on motor side of wheel for a large cassette. Smaller wheels will have smaller purges and less adjustment slots, however the general steps for adjusting purge are the same.

When installed, the purge angle is factory-set to 10-degrees. If the HVAC system design specification requires a different angle, complete the following steps to adjust the purge:

To Increase Purge Angle:

1. Remove all top bolts in each slot on the front face of the purge, Figure 8a. Set aside for use in a future step.

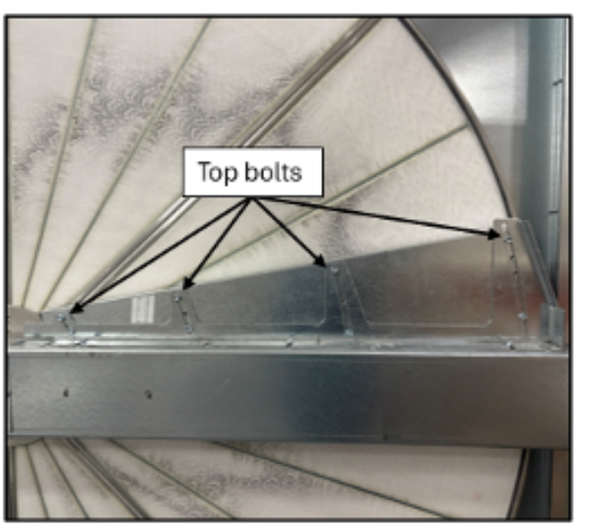

Figure 8a Remove top bolt in each slot.

2. Loosen all bottom bolts in each slot on the front face of the purge. Adjust the purge sector to the specified angle, Figure 8b and 8c.

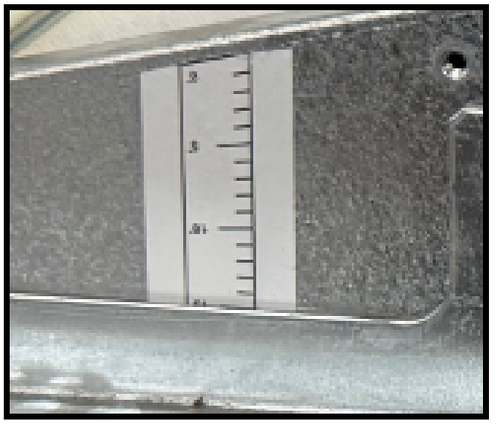

Figure 8b Set purge angle.

Figure 8c Set desired purge angle.

3. Add top bolts back into the highest accessible threaded hole of each slot where applicable. If there is a set screw already in that hole acting as a plug, use an allen wrench to remove the set screw and install the bolt instead.

Note: The goal is to have 2 bolts in each slot, however, depending on the desired purge angle, there may be a slot that can only fit 1 bolt.

4. Tighten all bolts.

5. Turn the wheel by hand clockwise (when viewed from pulley side) to check for interference.

Figure 8d Purge sector set at final angle. All holes filled with a bolt or set screw.

To Decrease Purge Angle:

1. Remove all bottom bolts in each slot on the front face of the purge, Figure 9a. Set aside for use in a future step.

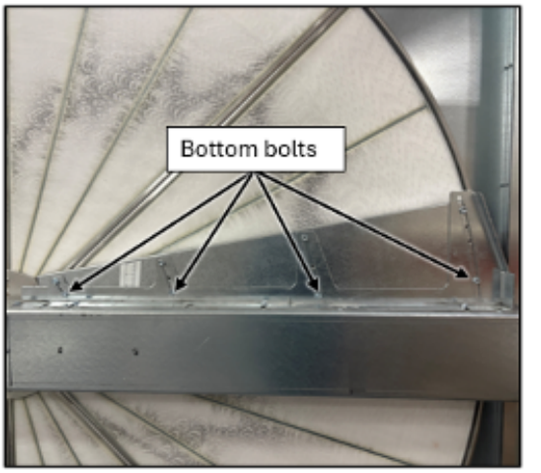

Figure 9a Remove bottom bolt in each slot.

2.Loosen all top bolts in each slot on the front face of the purge. Adjust the purge sector to the specified angle, Figure 9b.

Figure 9b Set desired purge angle.

3. Add bottom bolts back into the lowest accessible threaded hole of each slot where applicable. If there is a set screw already in that hole acting as a plug, use an allen wrench to remove the set screw and install the bolt instead.

Note: The goal is to have 2 bolts in each slot, however, depending on the desired purge angle, there may be a slot that can only fit 1 bolt.

4. Tighten all bolts.

5. Turn the wheel by hand clockwise (when viewed from pulley side) to check for interference.

Check Purge Seal

If a purge is installed, check for a slight interference fit between the seal and the face of the wheel by sliding a piece of paper ("feeler gauge") between the seal and the media at multiple locations along the purge seal as you rotate the wheel slowly by hand (clockwise when viewed from the pulley side), Figure 10. Verify that the media slightly grabs the paper during the rotation.

If it is necessary to adjust a purge seal to the face of the wheel, loosen the two or three screws (depending on the wheel size) along the bearing beam, Figure 10, and adjust to the proper distance from the media surface. Tighten the screws and re-test the seal.

Figure 10 Check purge seal and adjust (if necessary).

Inspection

Before starting the system, confirm the following:

WARNING

Before servicing entire HVAC system, turn off the main disconnect to the unit. Use the site-specific Lockout-Tagout out procedure.

- Wheel spins freely by hand in a clockwise direction, with no interference noise.
- Wheel is not “racked" (wheel rotates parallel to bearing beams).
- Belt tracks near middle of rim (not against rim support).
- Belt is not flipped (on a stretch belts for 36-inch wheels and above, the narrow face contacts the wheel rim; on a continuous link belt, small tabs contact wheel rim).
- All media segments are installed in the wheel and latches are closed. For instructions, see *Segment Removal/Installation beginning on page 13*.
- Diameter Seals are properly set and secured (seal is parallel to and just touching media surface). See *Inspect Diameter Seals beginning on page 6*.
- If purge is specified, it is set at proper angle - for instructions see *Set Purge Angle (if necessary) beginning on page 6*.

Post-Startup

Inspection

After applying power to system, confirm the following:

- Verify that the wheel is rotating in the direction of the rotation arrow located on cassette frame.
- On 3-phase motors, if the wheel does not rotate in the direction of the arrow, shut off the power to the system and interchange any two power supply leads to reverse rotation.
- Visually inspect belt; ensure belt is tracking near the center of the rim.
- No excessive noise (scraping, brushing, banging etc.).
- Running amps do not exceed nameplate Full Load Amperes (FLA).

Configuring Wheel Controls

Airxchange does not offer any direct speed controls for the wheel.

To confirm that wheel speed is responding to the field supplied speed control, consult the energy recovery wheel portion of the original equipment manufacturer (OEM) operating manual.

Items to Check Before Beginning Normal Operation

Verify the following:

- The area around the energy recovery wheel is free of debris.
- Cabinet doors are closed and secure.
- Power is restored to unit.

Inspection Checklist

WARNING

Before servicing or inspecting entire HVAC system, turn off the main disconnect to the unit. Use the site-specific Lockout-Tagout out procedure.

Airxchange recommends inspecting the wheel once per year to verify that the wheel, motor, belt, energy transfer segments, and seals are all in good working order. Routine maintenance is not required other than to clean the energy transfer media periodically on a schedule that is determined by the application (see next page for details).

Table 1 lists inspection steps for Airxchange wheels.

Table 1 Recommended inspection checklist for Airxchange wheels.

Conditions to Verify During Inspection	Check when Verified
NOTE: Perform an inspection of the wheel while it is running and again when it is turned OFF.	
• there is no damage to the segments	
• energy transfer media is not excessively dirty or covered with tacky substances (check both sides)	
• belt is installed around the wheel and pulley	
• belt is positioned and tracking property - with the narrow face of the urethane belt OR the small tabs on a continuous link belt centered on wheel rim during rotation	
• belt is not flipped or twisted	
• belt is not excessively worn (example: rounded edges, cuts, breaking, etc.)	
• wheel spins freely by hand clockwise (when viewed from pulley side)	
• motor is running at or below the Full Load Amps (FLA) specified by the motor manufacturer (check nameplate on motor for specifications)	
• when motor is running, wheel turns clockwise (when viewed from pulley side)	
• diameter seals are properly set and secured (with the seal just touching media surface)	
• media segments are properly installed in wheel (sitting flat in wheel)	
• all segment retaining latches are closed and secured	

Cleaning Airxchange Segments

All Airxchange wheels 25-inches in diameter and larger feature segmented energy transfer segments for easy removal and cleanings - per the application requirements. The polymer media segments are lightweight and can be lifted by a single person. This section briefly describes how to determine the need for cleaning and, if necessary, clean the Airxchange segments.

WARNING

When cleaning polymer media segments, **DO NOT** use acid based cleaners, aromatic solvents, temperatures in excess of 170-degrees Fahrenheit, or steam; damage to the media segments may result from improper cleaning.

Classes of Air

Cleaning the energy transfer media will help maintain optimal performance. The frequency of cleaning is largely dependent on the application and air quality. Using ASHRAE's Classes of Air categories, Table 2, is useful in understanding the application and creating a routine cleaning schedule.

Table 2 Classes of air.

Class 1 - *Clean Air*	**Class 2 - Moderately Clean Air**
Class 1 air has low contaminant concentration with inoffensive odor and sensory irritation intensity. Examples of *Class 1* air include: • office spaces • classrooms • assembly rooms • churches • corridors	*Class 2* air has moderate contaminant concentration, with mildly offensive odors or sensory-irritation intensity. Examples of Class 2 air include: • rest rooms • swimming pools • dining rooms • locker rooms • warehouses • Dorms.
Class 3 - *Dirty Air*	**Class 3 - *Dirty Air***
Class 3 air has significant contaminant concentration and significant offensive odor or sensory-irritation intensity. Examples of Class 3 air include: • kitchens • dry cleaners • beauty salons • laboratories • pet shops	*Class 4* air has highly objectionable fumes or gases and potentially contains dangerous particles, bio-aerosols, or gases at a concentration high enough to be considered harmful, not suitable for recirculation or transfer to any other space. Examples of Class 4 air include: • paint spray booths • laboratory fume exhaust • kitchen grease exhaust

Determine Cleaning Frequency

Airxchange offers the following general guidelines for removal and cleaning of the energy transfer media, Table 3, based on ASHRAE's Classes of Air categories, Table 2. Actual cleaning frequency should ultimately be determined based on the results of the annual inspection.

Table 3 Recommended cleaning frequency (based on class of air).

Class of Air	Cleaning Frequency
Class 1 - Clean Air	Every 8-10 years
Class 2 - Moderately Clean Air	Every 4-6 years
Class 3 - Dirty Air	Every 1-2 years
Class 4 - Contaminated Air	N/A

NOTE: When applied to smoking or industrial environments with visible airborne contaminants, Airxchange recommends inspection and cleaning once or twice per year to maintain optimal performance.

Cleaning Requirements Vary by Application

All surfaces exposed to an air stream will need to be cleaned over time. Generally, rotary energy recovery wheels self-clean when exposed to small amounts of dry dust and dirt as the wheel rotates between two counter flowing air streams.

However, when exposed to air streams containing oils, VOCs, aerosols, or smoke, these contaminants will build on the surface of the media to reduce its energy transfer effectiveness.

Visual Inspection

Annual inspection of the media surface during preventative maintenance checks is recommended. Check both sides of the wheel. Mild discoloration of the surface of the media is normal.

Cleaning Methods

To clean a buildup of dry contaminants on the media surface, brush or vacuum the surface on both sides to remove all debris, including between the layers of polymer. Clean, unobstructed passageways provide the maximum energy savings for the lowest operating cost.

To clean media surfaces that have a buildup of containments, Airxchange recommends soaking the segment overnight to effectively remove all contaminants and restore the heat/moisture transfer performance.

There are several methods to remove contaminant buildup:

- The best method of removing buildup is to soak the segment overnight in a five-percent solution of a non-acid based coil cleaner. ***WARNING: Monolithic wheels with internal bearings should not be soaked to avoid corroding bearing.***

  After soaking, rinse the segments until the water runs clear and then allow excess water to drain prior to reinstalling the segments. A small amount of moisture on the media will be dried out by the airflow.

- Another option is to run water from a hose through the removed media while brushing, though this method is not as effective as the overnight soak.

About Discoloration of Media Surface

Once clean, media segments may remain slightly discolored. Surface discoloration does not affect the performance of the wheel.

Optional Cleaning Methods

- If a tub is not available for soaking, a makeshift tub can be easily constructed out of wood boards and any waterproof material, such as a polyethylene sheet. The non-acid based coil cleaner is not corrosive to the polymer media or polyethylene sheet.
- For applications with multiple identical wheels, keeping a spare set of segments available can eliminate system disruptions during cleaning. Contact Airxchange for more information.

Segment Removal/Installation

Procedure Varies by Wheel Size

The procedure to remove and install the energy transfer media varies by size, Figure 11. Airxchange wheels are offered in the following size ranges:

- **Monolithic** (25-inches and under, 1 wheel) - see *19 to 25-inch Monolithic Wheel beginning on page 14*.
- **Small Segmented** (25-inch and 30-inch, 4 segments) - see *25 to 30 Inch Segmented Wheel beginning on page 15*.
- **Medium Segmented** (36-inch to 86-inch, 6 or 8 segments) - see *36 to 86-inch Segmented Wheel beginning on page 17*.
- **Large Segmented with Satellites** (92-inch to 125-inch, 8 inner segments and 8 satellite segments) - *92 to 125-inch Segmented Wheel beginning on page 19*.

Instructional Videos

Step by step instructional videos for these procedures are available. See *Service Tools beginning on page 5* for details or visit **www.airxchange.com/replacement-parts/** .

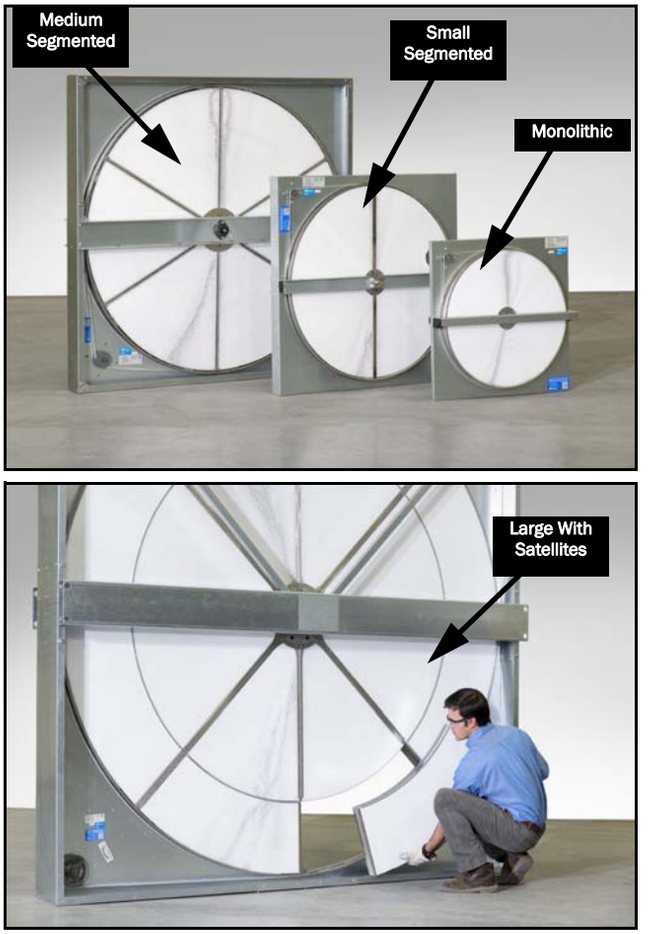

Figure 11 A sample collection of the available wheels from Airxchange.

19 to 25-inch Monolithic Wheel

Complete the following procedures to remove and install a 19 to 25-inch monolithic segment.

WARNING

Before servicing entire HVAC system, turn off the main disconnect to the unit. Use the site-specific Lockout-Tagout out procedure.

Tools

- Phillips screwdriver
- nut driver or socket set
- gloves

Series 19 to 21 Wheel Removal and Installation

1 Disconnect power to the wheel.

2 If possible, remove wheel frame from cabinet.

3 If a beam is present on the pulley side, remove the mounting screw from each end of the beam, Figure 12.

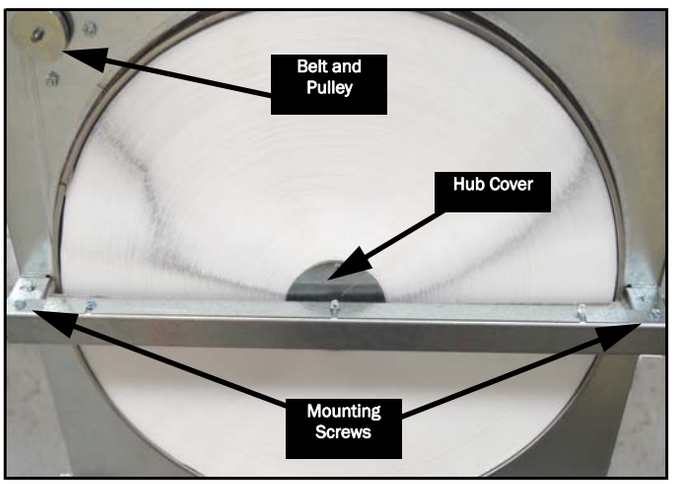

Figure 12 19 to 21 inch monolithic wheel.

4 Remove the beam.

5 Remove the two hub cover screws, Figure 12.

6 Remove center screw from the end of the wheel shaft, Figure 13.

7 Remove the belt from the wheel, Figure 12.

8 Remove the wheel from the frame.

9 To install the wheel, complete the previous 8 steps in reverse order.

10 Turn wheel clockwise by hand (when viewed from pulley side) and check operation.

11 Replace frame in cabinet and apply power to system.

12 Observe the wheel operating under power.

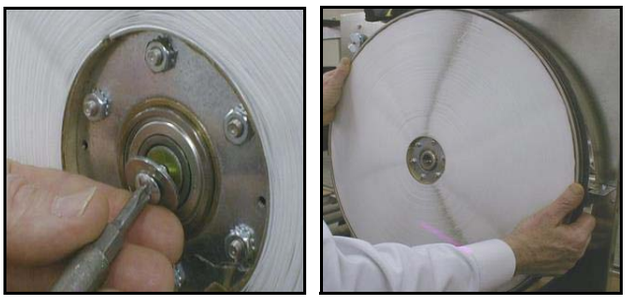

Figure 13 Remove center screw and wheel from frame.

Series 25 Removal and Installation

1 Disconnect power to the wheel.

2 If possible, remove wheel frame from cabinet.

3 From the pulley side, remove the wheel retaining bolt and washer from the end of the shaft, Figure 14.

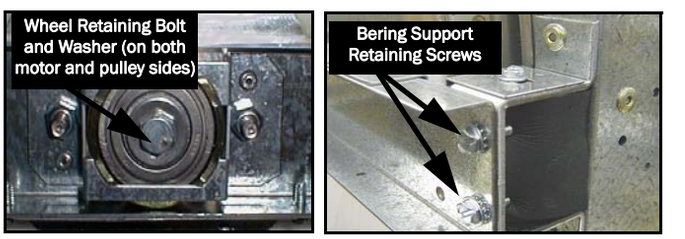

Figure 14 Remove bolt and washer, then beam retaining screws.

4 Remove the two bearing support retaining screws from each side of the beam, Figure 14.

5 Remove the pulley side beam.

6 Disengage the belt from the pulley.

7 From the motor side, remove the wheel retaining bolt and washer from the end of the shaft, Figure 14.

8 Remove the wheel from the frame.

9 To install the wheel, complete the previous 8 steps in reverse order.

10 Turn wheel clockwise by hand (when viewed from pulley side) and check operation.

11 Replace frame in cabinet and apply power to system.

12 Observe the wheel operating under power.

25 to 30 Inch Segmented Wheel

WARNING

An uneven number of segments in the wheel will cause the wheel to accelerate in rotation. Minimize wheel imbalance and unwanted rotation during service by installing or removing opposing segments for even weight distribution, Figure 15. Failure to maintain control of the wheel rotation while removing or installing segments could cause severe injury to fingers or hands.

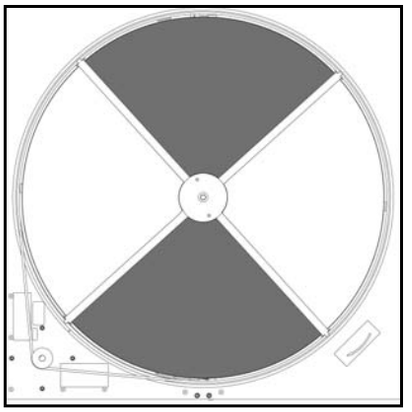

Figure 15 Remove or install opposing segments to minimize wheel imbalance.

WARNING

Before servicing entire HVAC system, turn off the main disconnect to the unit. Use the site-specific Lockout-Tagout out procedure.

Tools

- flathead screwdriver
- gloves

Removal

1 Disconnect power from wheel.

2 Remove cabinet covers to gain access and slide wheel frame out of cabinet (if applicable).

3 Position first segment to be removed at the top of the wheel, Figure 15.

4 From the pulley side, unhook the flexible retaining strap on each side of the segment from the wheel rim and then remove both straps, Figure 16.

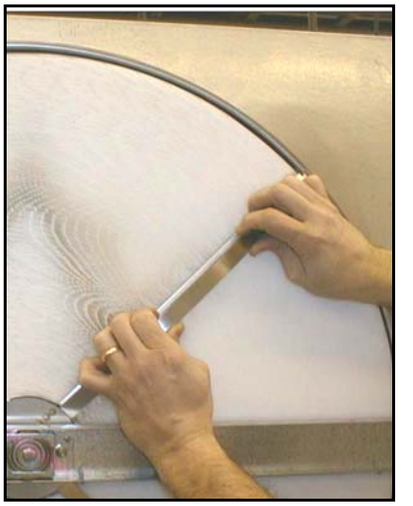

Figure 16 Remove retainer straps.

5 Use hand pressure from the motor side to remove segment from the spokes while supporting front with your other hand (segment slides straight out), Figure 17.

If necessary, use a flathead screwdriver or pry-bar at the top corner of the segment. Be careful not to bend the segment frame or wheel rim.

Figure 17 Remove segment.

6 Rotate wheel and remove remaining two retaining straps, Figure 16.

7 Remove the remaining segments.

Installation

1 Ensure that power is disconnected from wheel.

2 From the pulley side, install each of the four segments by sliding them straight into the wheel opening, Figure 17.

NOTE:

The face of the segment with the embedded stiffener must face the motor side of the wheel, Figure 18.

Figure 18 Embedded stiffener faces motor side.

3 Install the flexible retaining straps by inserting the ends under the hub plate and then into the slot on the rim at the end of the spoke, Figure 16.

4 Confirm that segments and straps are firmly retained in the wheel structure before applying power to the wheel.

36 to 86-inch Segmented Wheel

WARNING

An uneven number of segments in the wheel will cause the wheel to accelerate in rotation. Minimize wheel imbalance and unwanted rotation during service by installing or removing opposing segments for even weight distribution, Figure 19. Failure to maintain control of the wheel rotation while removing or installing all segments could cause severe injury to fingers or hands. Always close and secure segment retaining latches before rotating wheel.

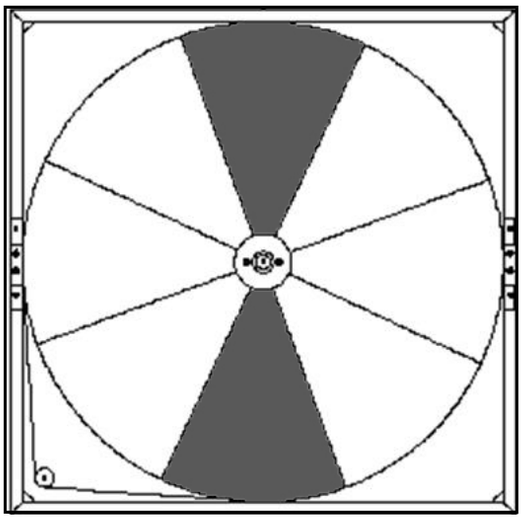

Figure 19 Remove or install opposing segments to minimize wheel imbalance.

WARNING

Before servicing entire HVAC system, turn off the main disconnect to the unit. Use the site-specific Lockout-Tagout out procedure.

Tools

- flathead screwdriver
- gloves
- 3/16-inch Allen wrench (for ERC 81 and ERC 86)

Removal

1 Disconnect power from wheel.

2 Gain access to wheel and slide wheel frame out of cabinet (if applicable).

3 From the pulley side, rotate segment to be removed to the top of the wheel.

4 Using a flathead screwdriver, unlock and open the two segment retaining latches, Figure 20, at the outer corners of the segment to be removed.

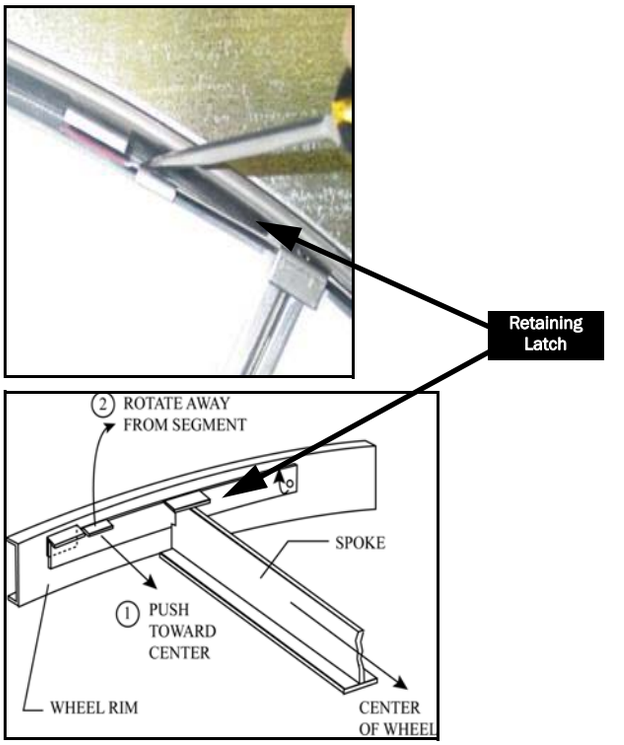

Figure 20 Release retaining latches following steps 1 and 2 in diagram.

5 For ERC-81 and ERC 86, use a 3/16-inch Allen wrench to remove the nose bolt securing the segment to the hub plate, Figure 21.

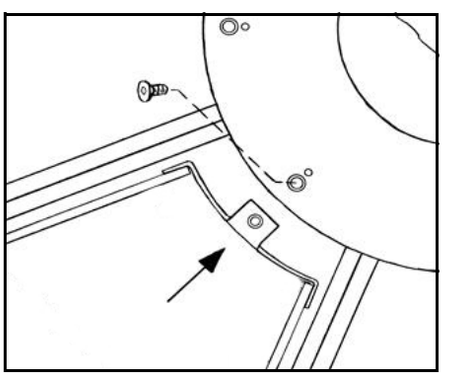

Figure 21 Nose entering hub plate (ERC 81-86 ONLY includes a screw).

6 Remove segment by sliding outer portion of segment out first before disengaging the nose, Figure 21. A flathead Screwdriver may be used to aid segment removal. Be careful not to bend the segment frame or wheel rim.

7 Once segment is removed, close both latches. ***WARNING: THE WHEEL IS NOW UNBALANCED.***

8 Slowly rotate wheel 180-degrees and remove the opposing segment to re-balance the wheel, Figure 19.

9 Remove the remaining segments by repeating the previous three steps.

Installation

1 Ensure that power is disconnected from the wheel.

2 Begin by positioning one empty segment bay at the top of the wheel and opening the two retaining latches, Figure 20.

NOTE:

The face of the segment, with the embedded stiffener must face the motor side of the wheel, Figure 22.

Figure 22 Embedded stiffener faces motor side.

3 From the pulley side, slide segment into place nose first, Figure 21, then push outer portion of segment in to wheel frame. If you are installing an ERC-81 or ERC-86, use a 3/16-inch Allen wrench and the nose bolt to secure the segment to the hub.

4 Close the retaining latches on outer corners of segment to secure the segment inside the wheel, Figure 20.

5 Rotate first segment 180-degrees and install the opposing segment to re-balance the wheel, Figure 19.

6 Repeat until all of the remaining segments are installed, ensuring balance throughout the procedure, Figure 19.

7 Apply power to wheel to confirm rotation.

92 to 125-inch Segmented Wheel

WARNING

An uneven number of segments in the wheel will cause the wheel to accelerate in rotation. Minimize wheel imbalance and unwanted rotation during service by installing or removing opposing segments for even weight distribution, Figure 23. Failure to maintain control of the wheel rotation while removing or installing all segments could cause severe injury to fingers or hands. Always close and secure segment retaining latches before rotating wheel.

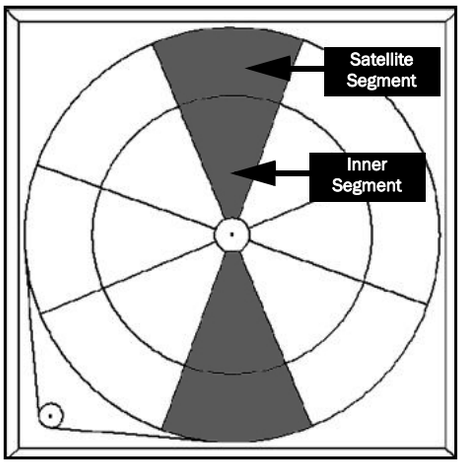

Figure 23 Remove or install opposing inner and satellite segments to minimize wheel imbalance.

WARNING

Before servicing entire HVAC system, turn off the main disconnect to the unit. Use the site-specific Lockout-Tagout out procedure.

Tools

- flathead screwdriver
- Phillips wrench
- gloves
- 5/32-inch Allen wrench

Remove Segments

NOTE: In order to remove inner segment, first remove the satellite segment.

1 Disconnect power from wheel.

2 Gain access to the wheel.

3 Position a satellite segment at the top of the wheel.

4 Use a flathead screwdriver to unlock and open the two segment retaining latches at the top corners of the satellite segment, Figure 24. **BE CAREFUL NOT TO BEND SEGMENT FRAME OR WHEEL RIM.**

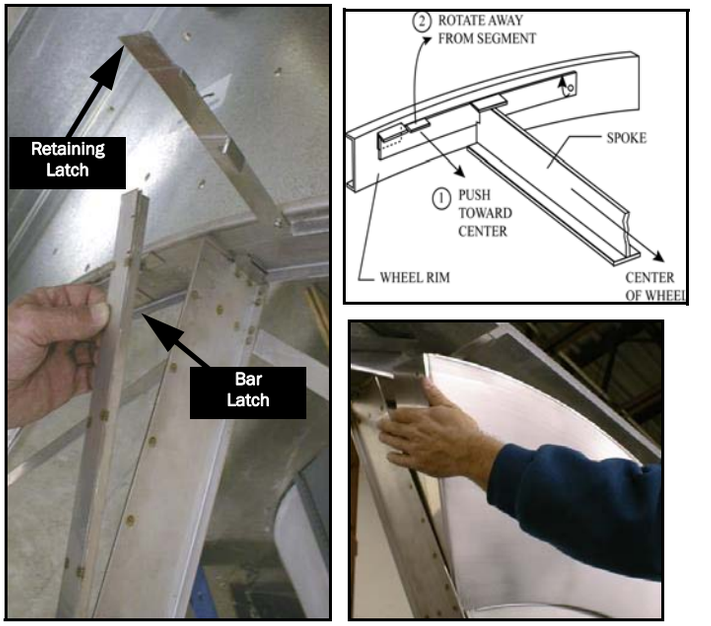

Figure 24 Release retaining latches (following steps 1 and 2 in diagram) and bar latches.

5 Remove and set aside the bar latches on each side of the satellite segment, Figure 24.

6 Remove satellite segment by sliding top end of segment out before the bottom, Figure 24. A flathead Screwdriver may be used in the corners to aid in removal.

7 Close the retaining latches, Figure 24.

8 To remove the inner segment, support segment with one hand while removing 1/4-20 flat head nose bolt in the hub with a 5/32-inch Allen wrench, Figure 25. ***WARNING: AS SOON AS THE NOSE BOLT IS REMOVED, THE SEGMENT IS NO LONGER SECURE.***

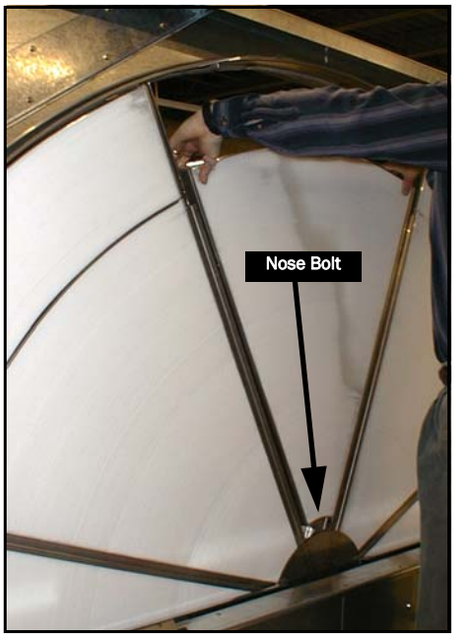

Figure 25 Remove nose bolt and remove interior segment.

9 With weight of segment resting in the lower spoke pocket, carefully slide segment out from between hub plates, Figure 25.

10 Rest segment on lower spoke, grasp nose of segment with one hand and the outer corner of the segment in the other hand, then remove segment from wheel, Figure 25.

11 Reinsert 1/4-20 bolt in segment nose bracket, Figure 25, to avoid loss.

12 Rotate wheel 180-degrees to remove opposing satellite and inner segment to restore balance, Figure 23.

13 Repeat previous eleven steps for each set of inner and satellite segments, always taking steps to keep the wheel balanced.

Install Segments

1 Move the empty bay to the top of the wheel.

2 Remove ¼ - 20 flat head bolt from segment nose bracket, Figure 25.

3 Center and rest segment on lower spoke. Slide inner segment along spokes until nose bracket contacts stop in hub plate, Figure 25.

4 Insert nose bolt and tighten until bolt is firmly seated, Figure 25.

5 Install the corresponding satellite segment by placing the bottom end into position first, then the top end, Figure 24.

6 Press straight in against all four corners to fully engage, Figure 24. A sharp rap with heel of hand on segment corners will assist entry when needed.

7 Temporarily engage the retaining latches and rotate wheel 180-degrees.

8 Repeat previous six steps to install inner and satellite segment sets, ensuring balance throughout the procedure, Figure 23.

9 When all segments are installed, open the retaining latches of one segment bay at a time to install bar latches on each side of the satellite segments, Figure 24.

10 Install each bar latch and reengage the corresponding retaining latch, Figure 24.

11 Repeat until all bar latches and retaining latches are engaged. Rotate wheel 360-degrees by hand clockwise (when viewed from pulley side) to confirm that the wheel rotates freely.

12 Return the wheel to operation.

Record Product Information for Reference

Use Table 4 below to record useful information about Airxchange Energy Recovery Wheels.

Table 4 Record product information for use when ordering replacement parts and planning maintenance schedules.

Model	Serial Number	Date Installed	Location